ASSEMBLY PART No.	CONTROL VALVE TYPE	CONTROL VALVE PART No.	PORT P FITTING	PORT T FITTING	PORT A & B FITTING	FLEX HOSE PORT A TO CYL	FLEX HOSE PORT B TO CYL	CYLINDER PORT FITTINGS
2002-007-0AX	OPEN CENTRE	(7 8728-014-00R	(40 9162-004-00S (BSP)	(40 9162-004-00S (BSP)	(38 9162-022-00Q (BSP)	(	(	(48 9162-607-00Y (BSP)
2002-007-0B3	CLOSED CENTRE	(7 8728-014-0AX	(40 9162-004-00S (BSP)	(40 9162-004-00S (BSP)	(38 9162-022-00Q (BSP)	(	(	(48 9162-607-00Y (BSP)
2002-007-0CV	OPEN CENTRE	(7 8728-014-00R	(38 9162-600-006 (JIC)	(40 9162-601-00W (JIC)	(38 9162-600-006 (JIC)	(51 9616-33G-294 (JIC)	(50 9616-34A-37Q (JIC)	(48 9162-921-003 (JIC)
2002-007-0DU	CLOSED CENTRE	(7 8728-014-0AX	(38 9162-600-006 (JIC)	(40 9162-601-00W (JIC)	(38 9162-600-006 (JIC)	(51 9616-33G-294 (JIC)	(50 9616-34A-37Q (JIC)	(48 9162-921-003 (JIC)

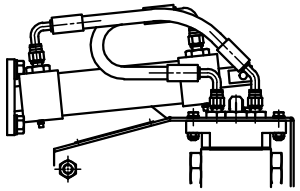

VIEW SHOWING ORIENTATION OF HOSES

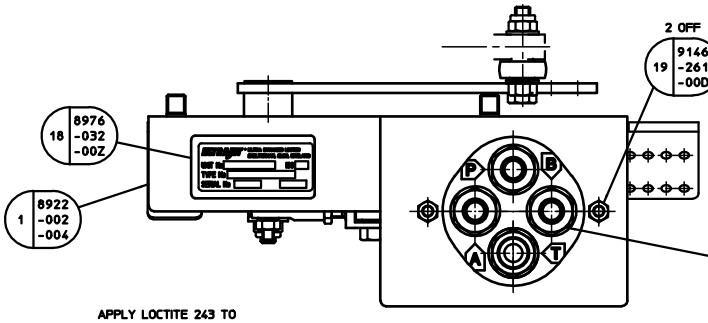

18 8976 -032 -00Z

1 8922 -002 -004

2 OFF 19 9146 -261 -00D

2 OFF 26 9145 -178 -00N

4 OFF 32 9223 -259 -00E

TORQUE TO 7-8 Nm (5-6 lbf ft). USE LOCTITE 243.

38 & 40 SEE TABLE FOR No

42 9341 -023 -00R 4 OFF

PROTECTION CAP, SEE SCHEDULE NOT SHOWN

APPLY LOCTITE 243 TO THREADS AND ASSEMBLE THESE ITEMS TO 56mm BETWEEN CENTRES

17 9612 -204 -009

30 9145 -226 -00L

4 8728 -006 -00N

24 9142 -251 -00H

32 9223 -259 -00E

26 9145 -178 -00N

TORQUE TO 7-8 Nm (5-6 lbf ft). NO LOCTITE

TORQUE TO 7-8 Nm (5-6 lbf ft). USE LOCTITE 638

24 9142 -251 -00H

26 9145 -178 -00N

32 9223 -259 -00E

COVER JOINT WITH HEAT-SHRINK TUBE

9 8728 -016 -00H

1 OFF RESRICTOR - SEE SCHEDULE FIT IN PORT B

8 8728 -015 -00M

7 SEE TABLE FOR PART No

20 9114 -223 -00X TORQUE TO 5-5.5 Nm (3.5-4 lbf ft). USE LOCTITE 243. 4 OFF

36 9223 -403 -00N 4 OFF

PARTS TO BE BAGGED IF SUPPLIED SEPARATELY TO ULTRAJET UNIT

1 OFF 23 8731 -040 -SSQ

2 OFF 22 8731 -033 -SSH

3 OFF TORQUE TO 31-34 Nm (23-25 lbf.ft) 28 9145 -180 -00L

3 OFF 34 9223 -261 -00C

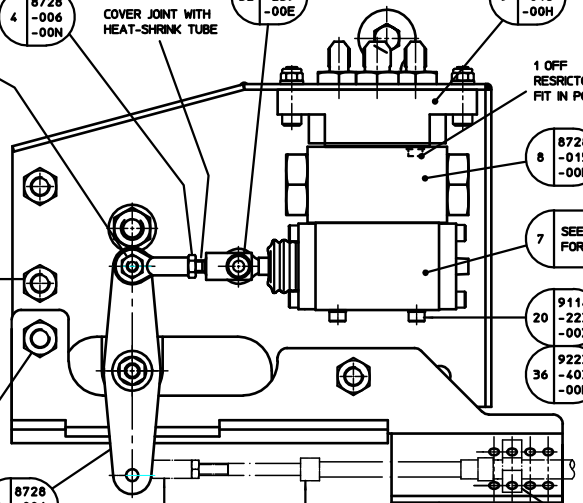

3 8728 -004 -00V

BALL JOINT NOT SUPPLIED WITH THIS ASSEMBLY

CABLE NOT SUPPLIED WITH THIS ASSEMBLY

12 8728 -034 -00F 1 OFF

CABLE CLAMP NOT SUPPLIED WITH THIS ASSEMBLY

6 8728 -026 -00C

TORQUE TO 17-19 Nm (12.5-14 lbf ft). USE LOCTITE 243. CARE TO BE TAKEN NOT TO GET LOCTITE IN BEARING.

27 9145 -179 -00J

5 8728 -024 -00L

2 OFF 37 9521 -452 -00H

6 8728 -026 -00C

TORQUE TO 60-65 Nm (44-48 lbf ft). USE LOCTITE 243.

29 9145 -181 -00G

35 9223 -262 -00Z

27 9145 -179 -00J

TORQUE TO 17-19 Nm (12.5-14 lbf ft). USE LOCTITE 243. CARE TO BE TAKEN NOT TO GET LOCTITE IN BEARING.

37 9521 -452 -00H 2 OFF

1 OFF 45 9141 -358 -00K

1 OFF TORQUE TO 31-34 Nm (23-25 lbf ft). 28 9145 -180 -00L

1 OFF 34 9223 -261 -00C

PARTS TO BE BAGGED IF SUPPLIED SEPARATELY TO ULTRAJET UNIT

21 9142 -302 -003

27 9145 -179 -00J

2 OFF 33 9226 -260 -00G

10 9517 -261 -00P DOUBLE LINK

27 9145 -179 -00J

25 9142 -301 -00Y

33 9223 -260 -00G

TORQUE TO 17-19 Nm (12.5-14 lbf ft). USE LOCTITE 243. CARE TO BE TAKEN NOT TO GET LOCTITE IN BEARING.

FIT CYLINDER LINK TO HOLE 'A'

	A	B	C
MAIN LINK	O	O	O

2 8728 -023 -00Q

NOTE : THIS IS A REDUCED DRAWING PLEASE DO NOT SCALE

USED ON	ULTRAJET 305HT								
UNIT No	8966-000-0**	ISSUE No.	1						
ASSY No	8966-001-0**	ISSUED ON	4057						
		DRAWN	P.C.B.						
		DATE	1-6-06						
		CHECKED	K.Bradley 12-6-06						
		APPROVED	H.Lane 12-6-06						

UNLESS OTHERWISE STATED ALL DIMENSIONS IN MILLIMETRES. GENERAL MANUFACTURING STANDARDS TO HDS 200. GEOMETRIC TOLERANCES AND SYMBOLS TO BS 308.

MATERIAL -

TREATMENT -

©ULTRA DYNAMICS LIMITED 2006

THIS DRAWING IS THE PROPERTY OF ULTRA DYNAMICS LIMITED AND IS CONFIDENTIAL. IT IS ISSUED SUBJECT TO THE CONDITIONS THAT

(1) THE INFORMATION ON ANY PART THEREOF CONTAINED IN IT SHALL NOT BE DISCLOSED IN ANY FORM TO A THIRD PARTY, AND

(2) IT OR ANY PART OF IT SHALL NOT BE REPRODUCED IN ANY FORM.

SCALE 1:1

ULTRA

THIRD ANGLE PROJECTION

TITLE

HYDRO - MECHANICAL REVERSE CONTROL SYSTEM ASSEMBLY

DRAWING No. 2002-007-0AX TO -007-0DU

ULTRA DYNAMICS LTD CHELTENHAM, GLOS., ENGLAND.

SIZE A0